Service manual
for TS2 brakes up to production no. 22254F0492

Replacement sealing cap and bellows TS2

[1] Prevent the vehicle from rolling away.

[2] **Release the service brake and remove the wheels.**

[3] Dismantle brake cylinder. Loosen both attachment nuts M 16 x 1.5 - AF 24 on the brake housing.

[4] Remove the brake cylinder (410) and attach it to the undercarriage in an accident-proof, temporary manner.

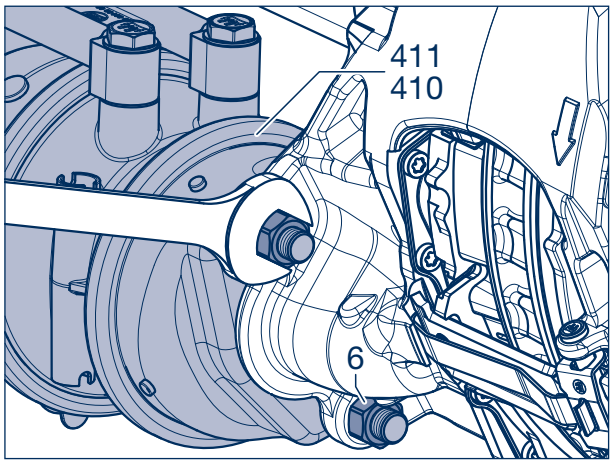

Figure 1

[5] Check brake lever and brake interior for corrosion.

> **Warning!**
> **If corrosion is found in the area of the brake lever or inside the brake, the brake caliper must be replaced.**
>
> **To replace the brake caliper, see from page 14.**

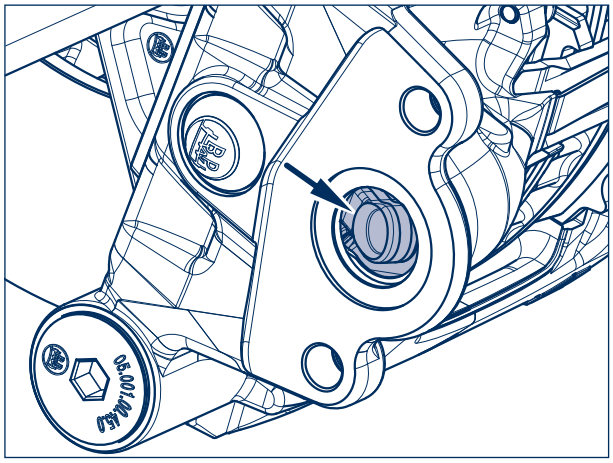

Figure 2

[6] Remove the sealing cap (370) of the adjuster with a screwdriver.

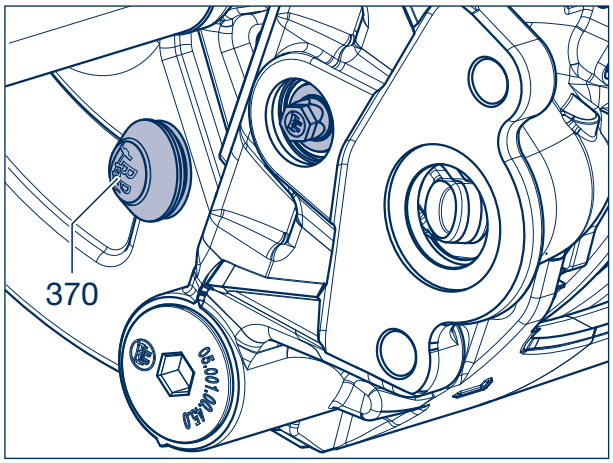

Figure 3

BPW Bergische Achsen Kommanditgesellschaft PO Box 12 80 · 51656 Wiehl, Germany · Phone +49 (0) 2262 78-0 info@bpw.de · **www.bpw.de**

Repair note!
If greasing can be detected in the area of the reset shaft, no corrosion test is required.

[7] Check the adjustment range and adjuster for corrosion.

If no corrosion can be detected, the inspection can be continued. Clean the area of the adjuster.

Warning!
If corrosion is found in the area of the resettor, the brake caliper must be replaced.

To replace the brake caliper, see from page 14.

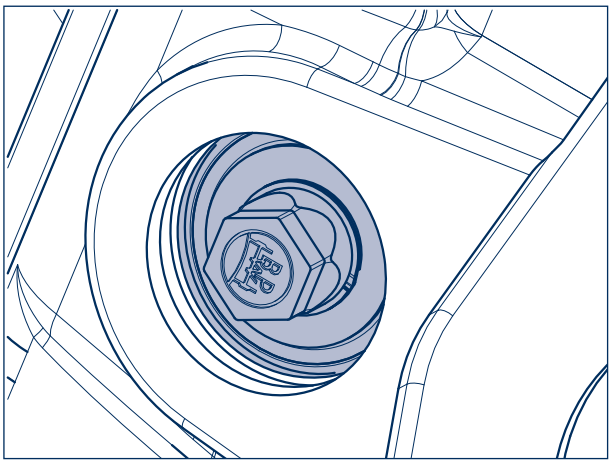

Figure 4

[8] Use a pencil to make a mark on the adjuster and brake caliper.

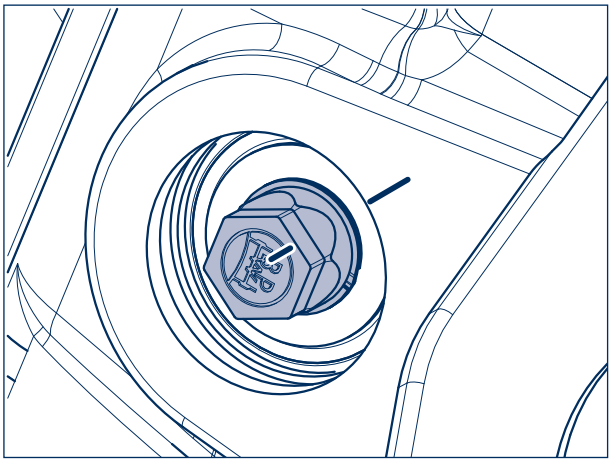

Figure 5

[9] Turn the adjuster with a spanner (AF 13) 90° **counterclockwise**.

Max. reset moment: 15 Nm

Repair note!
If the max. reset torque is exceeded, the adjustment can be irreparably damaged.

Attention!
Do not use a cordless screwdriver or impact wrench. Using these tools would cause considerable damage!

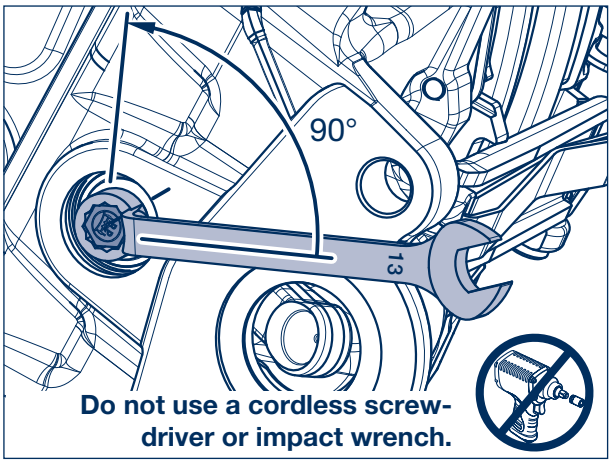

Figure 6

BPW Bergische Achsen Kommanditgesellschaft PO Box 12 80 · 51656 Wiehl, Germany · Phone +49 (0) 2262 78-0 info@bpw.de · **www.bpw.de**

[10] Operate the brake lever, e.g. with a screwdriver, or press it into the brake caliper.

[11] In the pressed position, check the inside of the caliper for corrosion.

Warning!
If corrosion is found in the area of the brake lever or inside the brake caliper, the brake caliper must be replaced.

To replace the brake caliper, see from page 14.

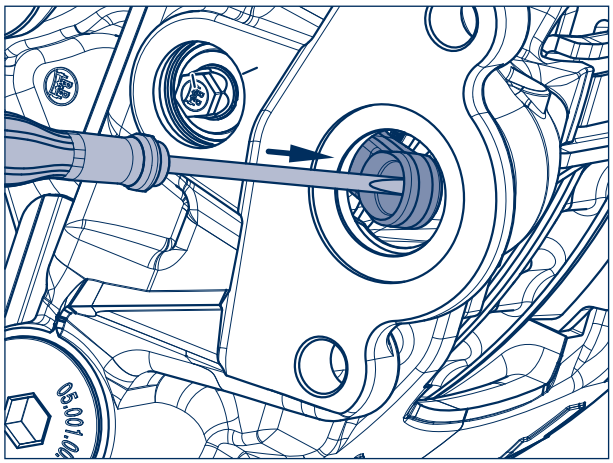

Figure 7

[12] Carry out a function check of the adjustment.
To do this, actuate the brake lever several times (see work step [10].
If it is functioning properly, the adjuster will turn back in the direction of the mark made.

Warning!
If no rotation of the adjuster is detected, the brake caliper must be replaced.

To replace the brake caliper, see from page 14.

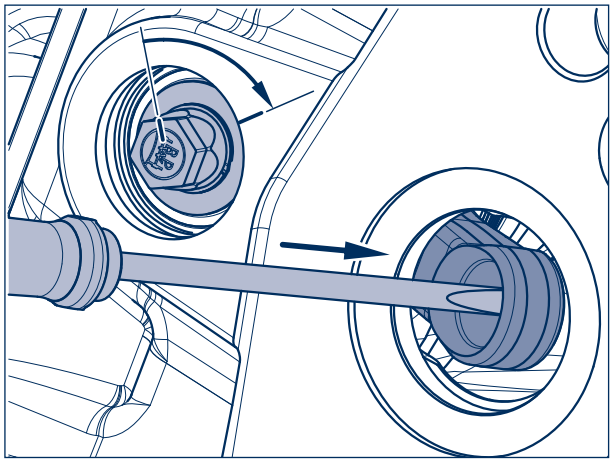

Figure 8

[13] Using a spanner (AF 13), turn the adjuster counter-clockwise until the pressure plate with bellow has been completely reset. (If nec., manually turn back the pressure plate with bellow to the compressed condition.)

Max. reset moment: 15 Nm

Repair note!
If the max. reset torque is exceeded, the adjustment can be irreparably damaged.

Attention!
Do not use a cordless screwdriver or impact wrench. Using these tools would cause considerable damage!

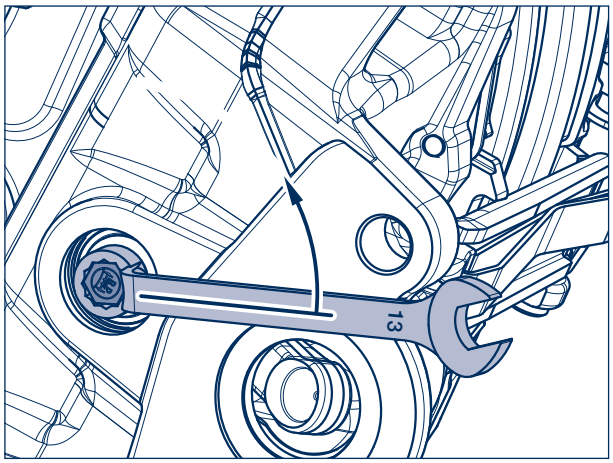

Figure 9

[14] Pull the spring split pin (398) out of the bolt (396) with a spring plier.

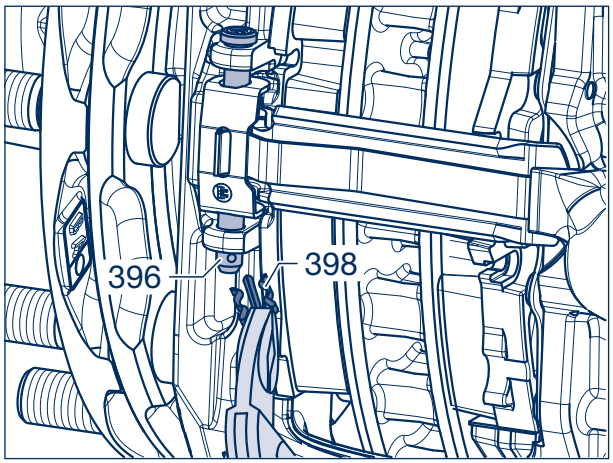

Figure 10

[15] Depress the clamping spring (394) and remove the bolt (396) with holding clamp (397).

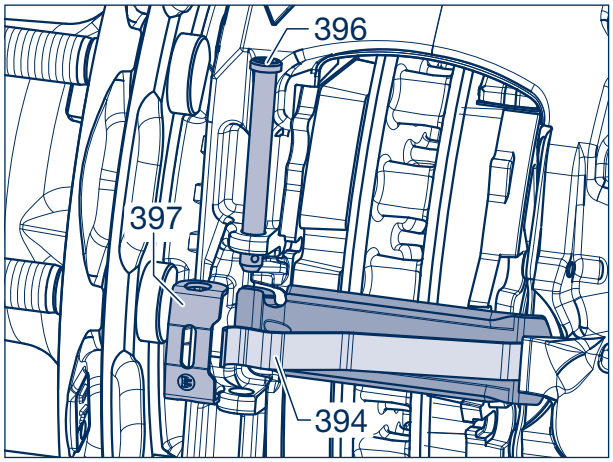

Figure 11

Caution!
Apply counter pressure to the brake linings (390, 391) if necessary so that they do not fall out of the lining groove when the pad retainer is removed.

[16] Remove the pad retainer (395) with clamping spring (394).

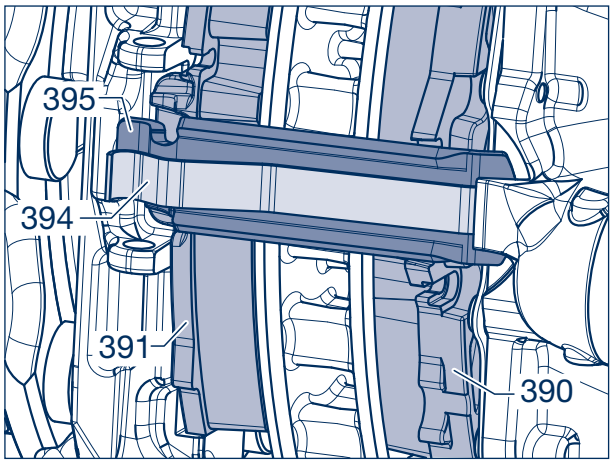

Figure 12

BPW Bergische Achsen Kommanditgesellschaft PO Box 12 80 · 51656 Wiehl, Germany · Phone +49 (0) 2262 78-0 info@bpw.de · **www.bpw.de**

[17] Remove the brake linings (390, 391).

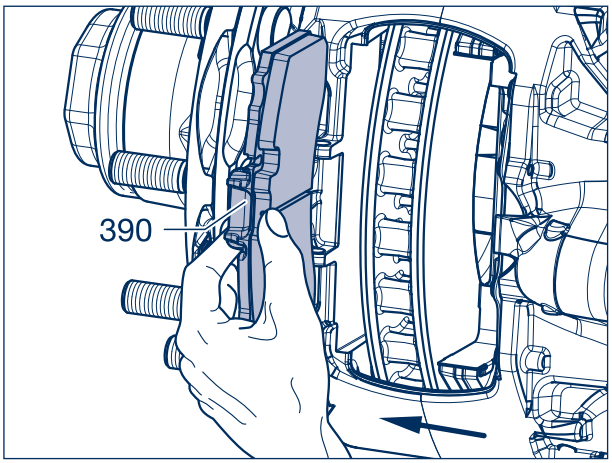

Figure 13

[18] Push the brake caliper as far as possible towards the centre of the axle.

Use a screwdriver to lift out and remove the bellow with pressure plate (363) from the dust cover (1). Do not deform the dust cover while doing so.

> **Repair note!**
> **The bellow with pressure plate (363) must be removed completely from the seat in the brake caliper.**
> **If the bellow has been torn off during disassembly, remove the remnants from the seat.**

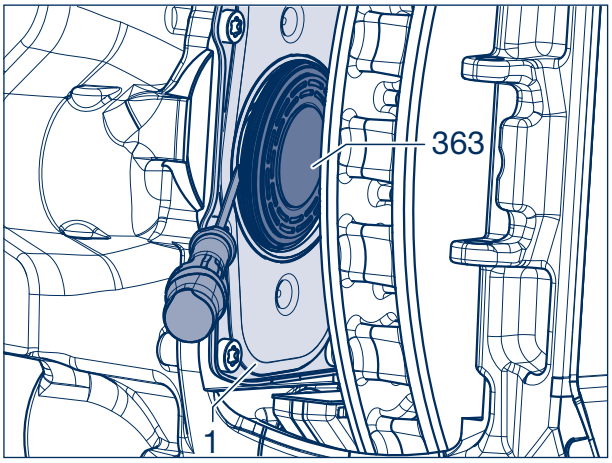

Figure 14

[19] Check brake interior for corrosion.

> **Warning!**
> **If corrosion is detected inside the brake, the brake caliper must be replaced.**
>
> **To replace the brake caliper, see from page 14.**

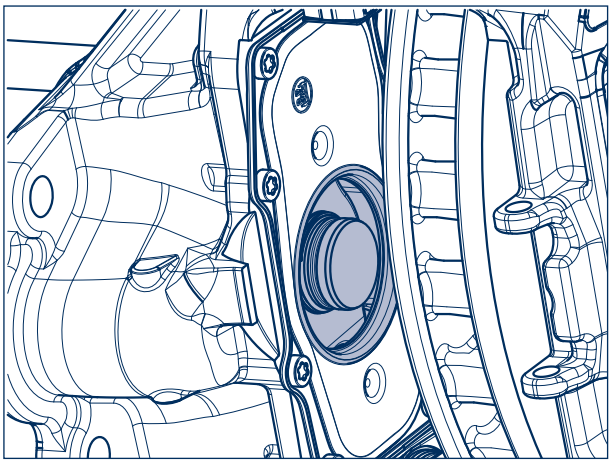

Figure 15

BPW Bergische Achsen Kommanditgesellschaft PO Box 12 80 · 51656 Wiehl, Germany · Phone +49 (0) 2262 78-0 info@bpw.de · **www.bpw.de**

[20] Insert new bellows with pressure plate (363) into the assembly tool BPW no. 02.0130.46.30 (rubber bellows pointing outwards).

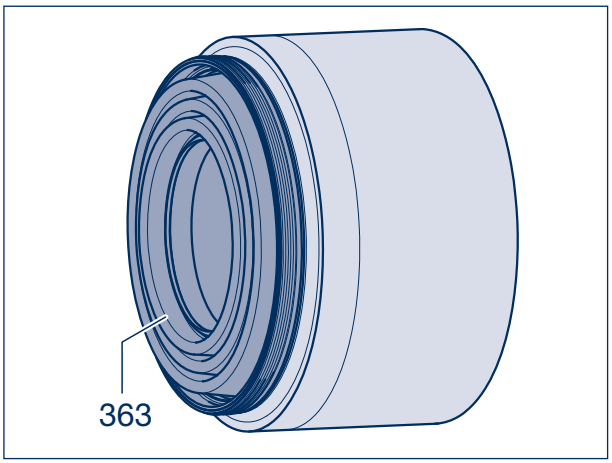

Figure 16

[21] Insert assembly tool with bellows (363) between brake disc (380) and cover plate.

[22] Center the bellow in the holder in the dust cover.

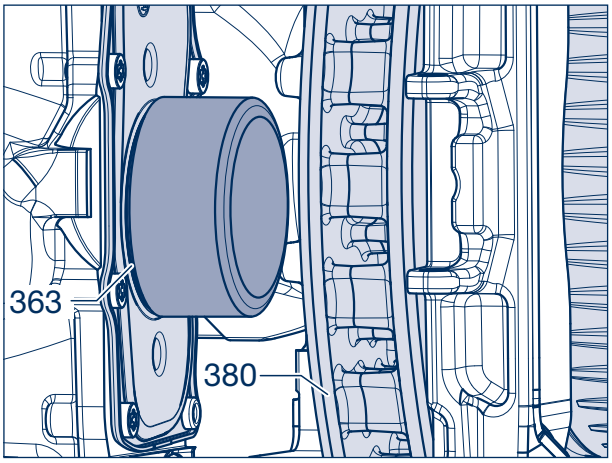

Figure 17

[23] Push the brake caliper outwards.

[24] Place the lever (e.g. hammer handle) between the brake caliper and the brake disc and press it outwards. This presses the bellows into the seat. To avoid damage to the brake disc, do not use sharp-edged tools.

> **Repair note!**
> **The grooved bellow seat must be completely assembled in the dust cover, the gap between the piston and the bead of the dust cover is < 0.7 mm (arrow). Make sure that the seating is entirely straight.**

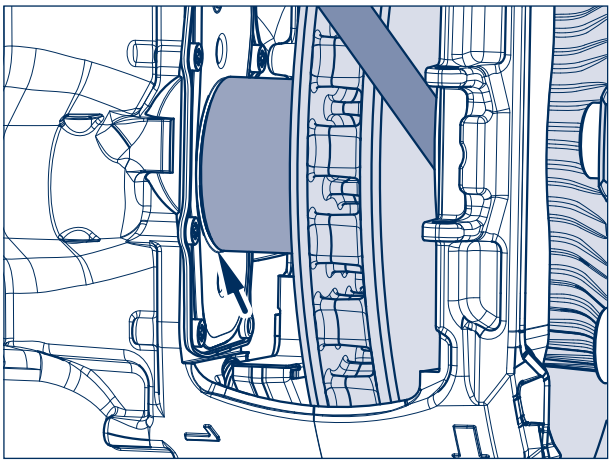

Figure 18

[25] Lever both wearing plates (389) off of the brake anchor. Clean the lining groove and the seats of the wearing plates on the brake anchor and remove corrosion.

[26] Clean the wearing plates, apply grease to the back and mount on the brake carrier.
The lateral mounting brackets (arrow) fix the plates on the brake anchor.

> **Repair note!**
> **The brake disc must remain free of grease.**

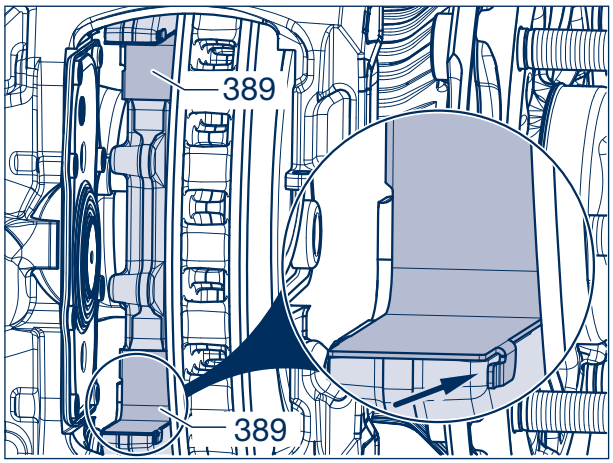

Figure 19

> **Repair note!**
> **Before the brake linings are installed, it must be ensured that the bellow with pressure plate (363) rests correctly folded against the dust cover.**

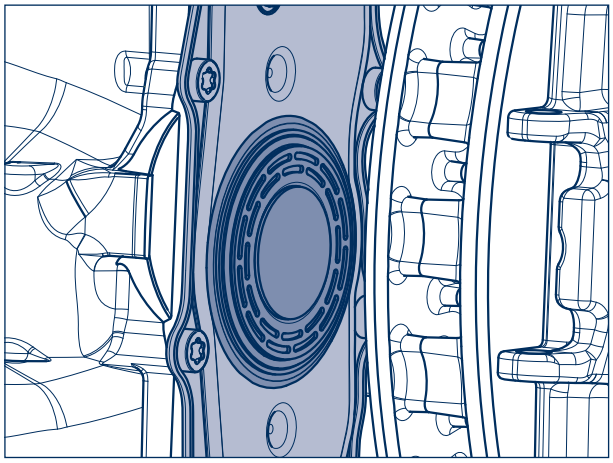

Figure 20

[27] Move the brake caliper towards the inside of the vehicle and insert the inner, active brake lining (390).

> **Repair note!**
> **Used active brake pads must be cleaned in the contact area with the wear plates.**

> **Note:**
> **The brake linings are supplied with different back plates.**

> **Repair note!**
> **Only replace brake linings on the same axle at the same time!**
> **Before the brake linings are installed, the brake must be reset completely.**

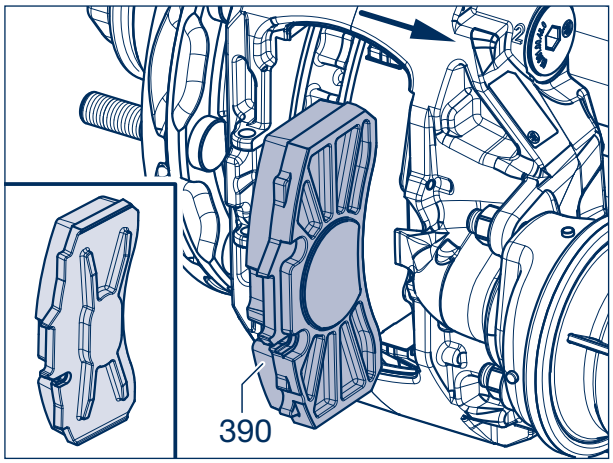

Figure 21

[28] Slide the brake caliper towards the outside of the vehicle and insert the outer, passive brake lining (391).

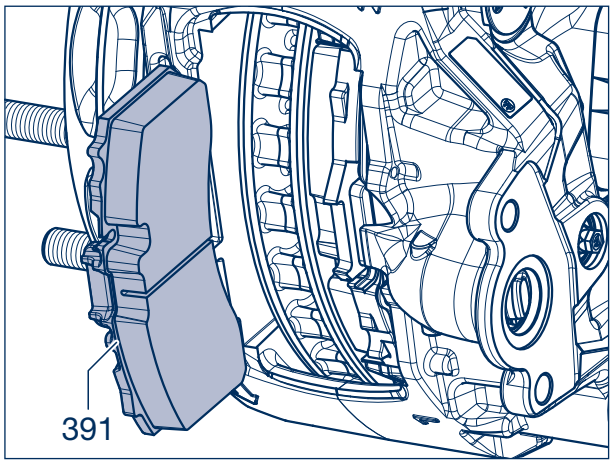

Figure 22

[29] Guide the pad retainer (395) with clamping spring (394) into the saddle opening.

[30] Place the holding clamp (397) onto the clamping spring and press it down together with the pad retainer until the bolt (396) can be inserted into the bore hole.

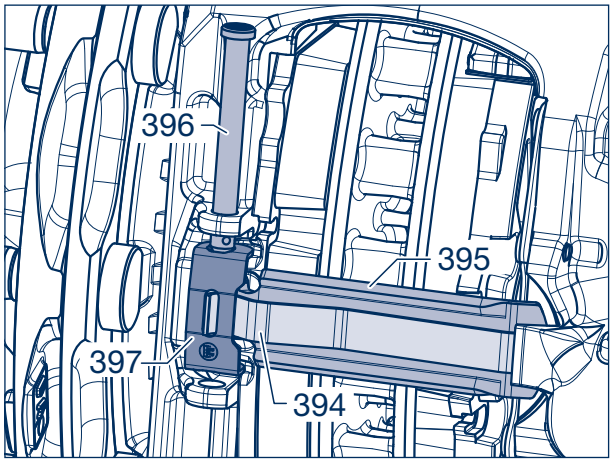

Figure 23

[31] Insert the bolt (396) from above, and secure it with the spring split pin (398).

[32] Following this, ensure that the wheel or hub can turn slightly when the brake is released.

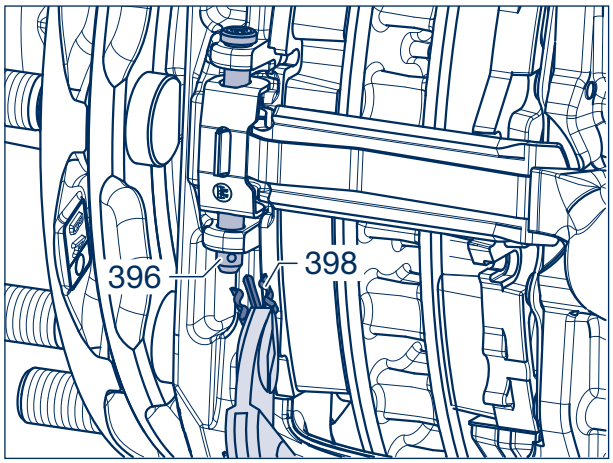

Figure 24

Setting the clearance

[33] Using a spanner (AF 13), turn the adjuster clockwise.

[34] Advance the brake until the brake linings rest against the brake disc free of play.

Max. torque: 15 Nm

Attention!
Do not use a cordless screwdriver or impact wrench. Using these tools would cause considerable damage!

[35] Next, turn back the adjuster by 90°.

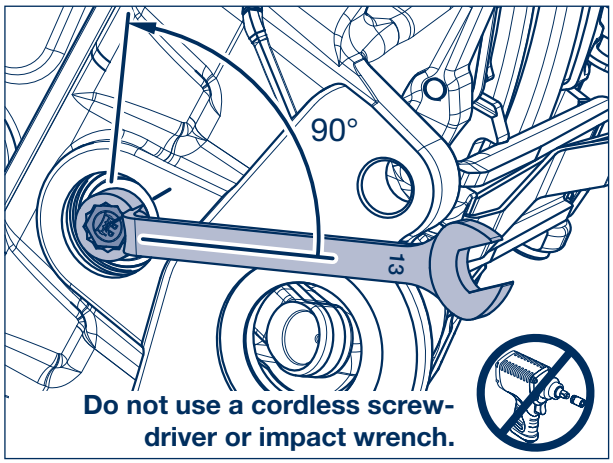

Figure 25

[36] Coat the entire face of the sealing bush with BPW ECO Disc Grease.

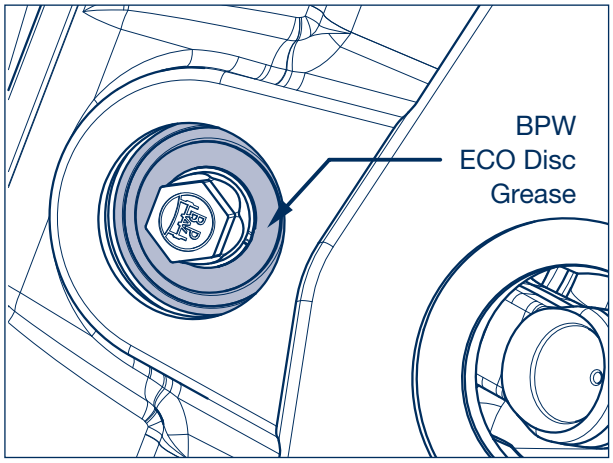

Figure 26

Mounting new sealing cap

☞ For assembly of the screw cap, see page 11, step [42].

Attention!
It is mandatory to use one of the new sealing caps for assembly.

[37] Insert the O-ring (without grease) into the groove of the **new sealing cap** if not pre-assembled.

When using a new black sealing cap, the O-ring is omitted.

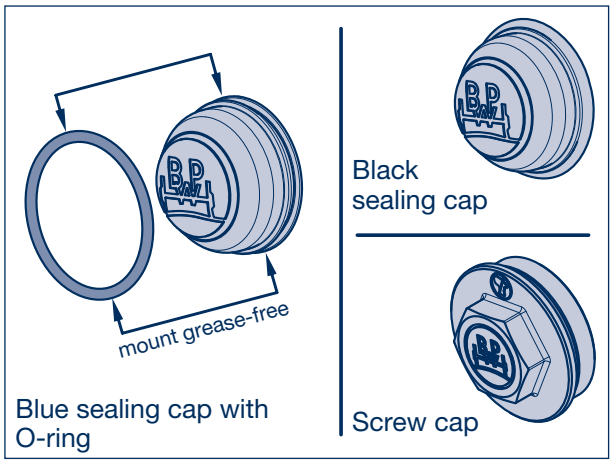

Figure 27

BPW Bergische Achsen Kommanditgesellschaft PO Box 12 80 · 51656 Wiehl, Germany · Phone +49 (0) 2262 78-0 info@bpw.de · **www.bpw.de**

[38] Coat the outside of the O-ring / black sealing cap with BPW ECO Disc Grease.

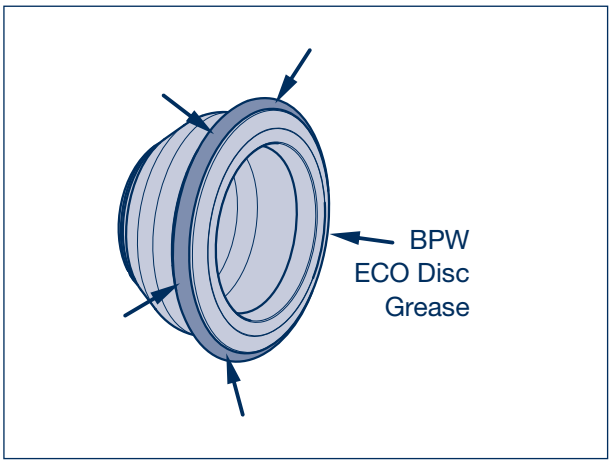

Figure 28

[39] Place the sealing cap at an angle in the bore groove.

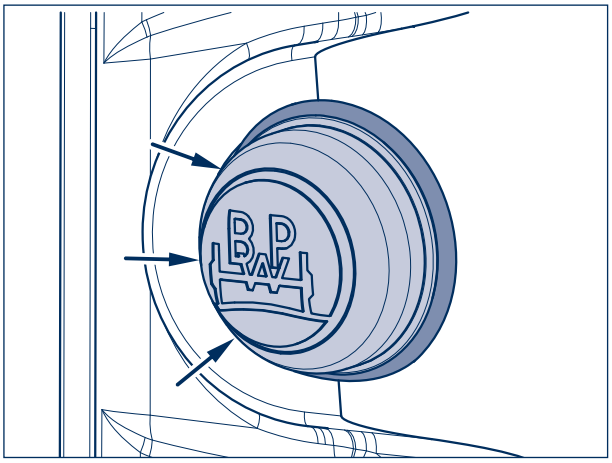

Figure 29

[40] Insert the sealing cap with sealing lips and O-ring into the cylindrical part of the bore and then press in until the sealing lips with O-ring engage in the bore groove.

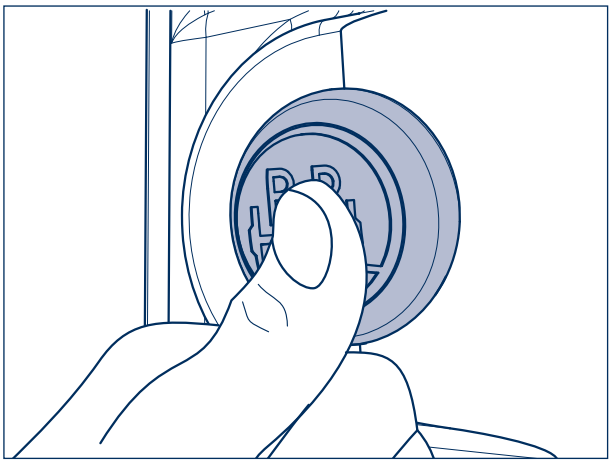

Figure 30

BPW Bergische Achsen Kommanditgesellschaft PO Box 12 80 · 51656 Wiehl, Germany · Phone +49 (0) 2262 78-0 info@bpw.de · **www.bpw.de**

[41] The correct fit is established when the sealing cap is centred in the hole and the O-ring is no longer visible.

> **Attention!**
> **If the instructions are not followed properly and the cap is not fitted correctly, there is a risk of moisture getting into the brake and corroding the adjuster. This can reduce the braking effect or even cause it to fail completely.**

☞ Continue with step [44].

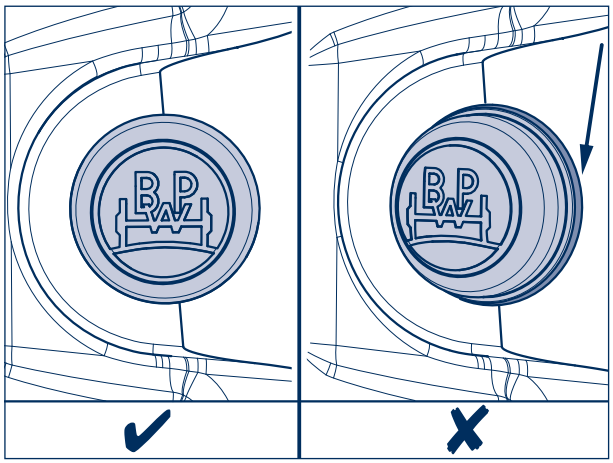

Figure 31

Screw closure cap

[42] Ensure that the O-ring is correctly seated in the groove (arrow) of the cap.

[43] Screw the screw cap (AF 21) with O-ring into the brake caliper without greasing and tighten with a tightening torque of 15 Nm.

Multiple use of the screw cap with O-ring is permissible.

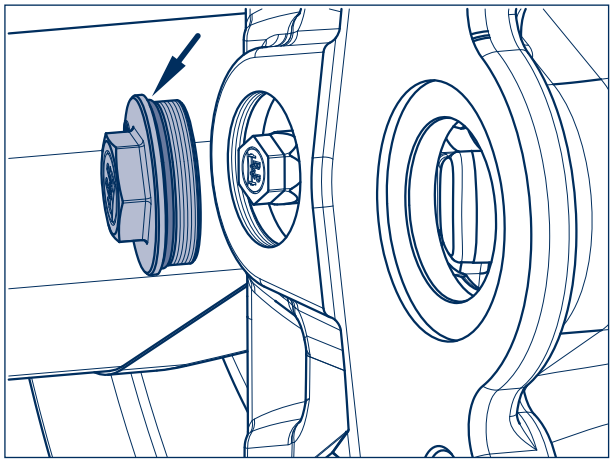

Figure 32

[44] Before fitting the brake cylinder (410), grease the spherical cap in the lever (arrow) with **BPW ECO Disc Grease**.

> **Repair note!**
> **Do not use grease containing molybdenum disulphide!**

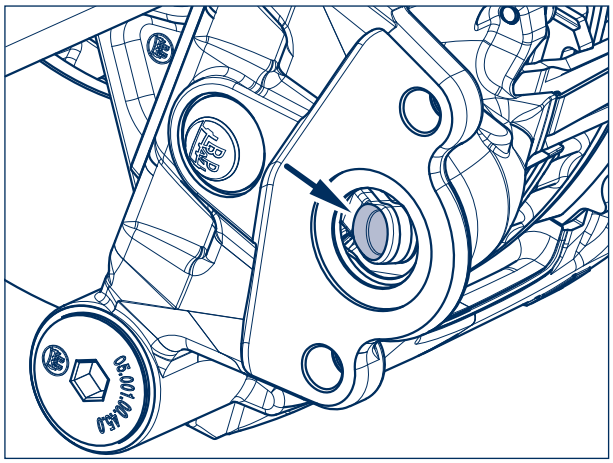

Figure 33

Note!
Clean the housing and brake cylinder contact surfaces before fitting. The seal (1) and push rod chamber (2) of the brake cylinder (410) must be free of dirt and moisture.

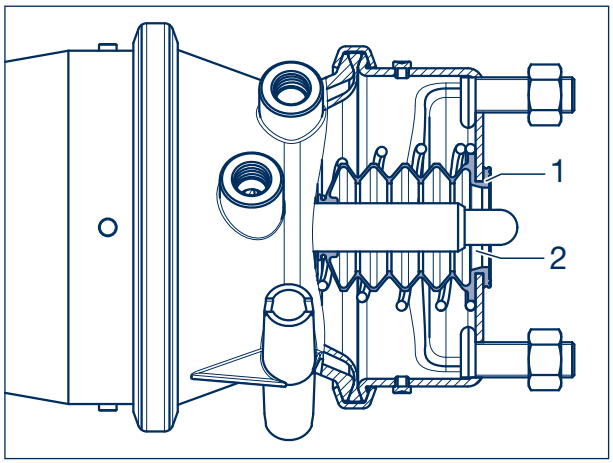

Figure 34

[45] Attach brake cylinders (410, 411). The holes (arrows) for the drainage must be directed downwards.
All other vent holes must remain sealed.

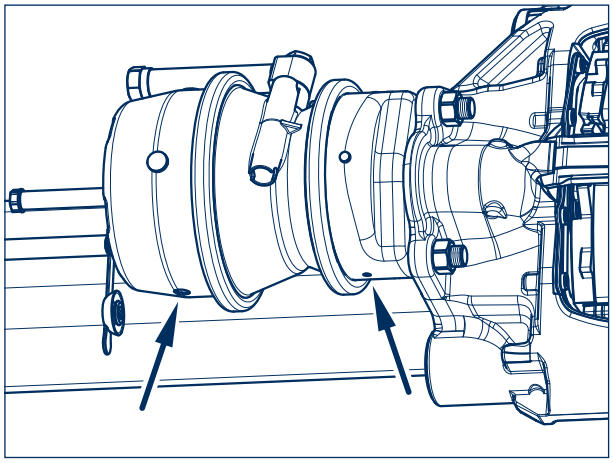

Figure 35

[46] Mount the brake cylinders (410, 411) with the fastening nuts (6).
Tightening torque:
M 16 x 1.5 - AF 24 M = **180 Nm** (180 - 210 Nm)

[47] Check brake lines (air connections) for leaks. The brake lines must be routed such that they do not twist or can rub against other components.

Repair note!
Check the functioning and effectiveness of the brake system!

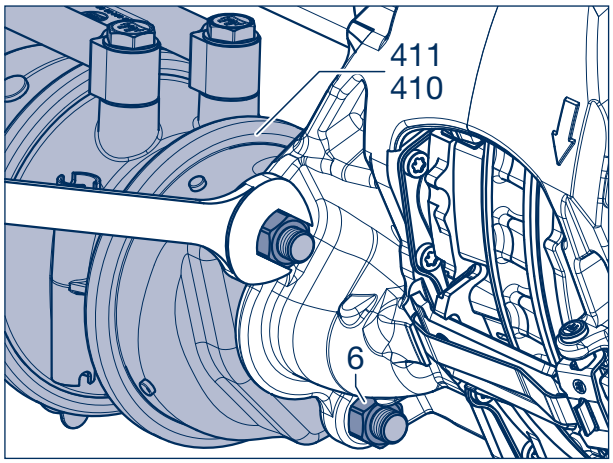

Figure 36

BPW Bergische Achsen Kommanditgesellschaft PO Box 12 80 · 51656 Wiehl, Germany · Phone +49 (0) 2262 78-0 info@bpw.de · **www.bpw.de**

[48] Attach the wheels.

[49] Screw on the wheel nuts (479).

[50] Lower the axle and tighten the wheel nuts to the required tightening torque.

Warning!
The tightening torque of the wheel nuts must be checked after the first run under load and, if necessary, retightened to the prescribed value.

Warning!
New discs and linings only have an optimal braking effect after a few braking operations.
For this reason, run in new brake linings while avoiding lengthy and unnecessarily sharp brake operations.

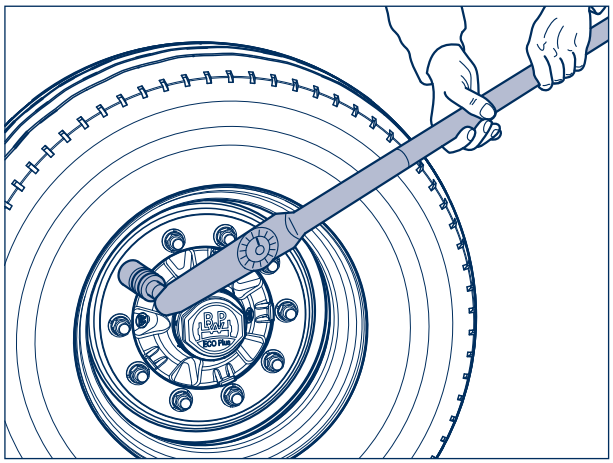

Figure 37

Set-up time once per vehicle:	**30 min**
Guide times per brake caliper	
• Replacement of sealing cap and bellows incl. inspection:	**40 min**
• Replacement brake caliper incl. inspection:	**60 min**

If a brake caliper replacement is necessary, the new production numbers of the brakes must also be entered in the data collection sheet in addition to the old ones.

Scanning this QR code will take you directly to the documents for the TS2 service measure.

This can be found in the download area of our website:
https://www.bpw.de/servicemassnahme-ts2

BPW Bergische Achsen Kommanditgesellschaft PO Box 12 80 · 51656 Wiehl, Germany · Phone +49 (0) 2262 78-0 info@bpw.de · **www.bpw.de**

Replace brake caliper

[1] Remove brake pads, see page 3, steps [13] - [17].

[2] Unscrew the sealing caps of the caliper guide (335) using the adapter (BPW no.: 02.0130.47.10 or 02.0130.49.10, AF 14).

> **Warning!**
> **Before loosening the cylinder head screws, secure the brake caliper against falling down.**

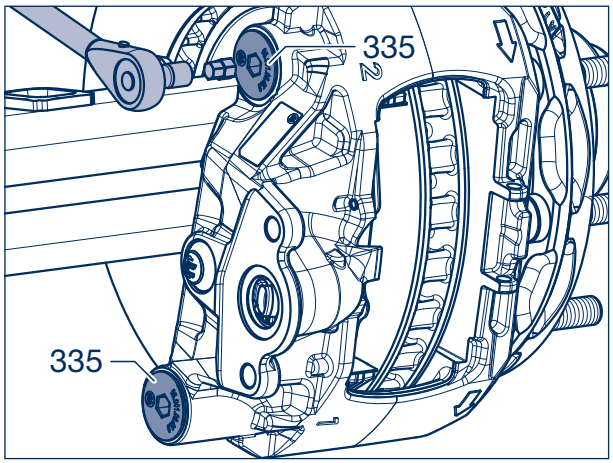

Figure 38

[3] Unscrew the cylinder head screws (325, 345) with the adapter AF 14 mm, according to the version T12, T14, T17 or T18 (see page 19 and 20).

If there is enough clearance, a ratchet with a box spanner AF 14 can be used.

> **Caution!**
> **DANGER OF CRUSHING!**
> **Only hold the brake caliper on the outside. Never place fingers between the brake caliper and the brake anchor! Never attach a lifting device to the pad retainer, since the pad retainer can be damaged.**

> **Caution!**
> **DANGER OF INJURY!**
> **The brake caliper must be secured against falling when it is taken down. Use a lifting device or second person for assistance.**

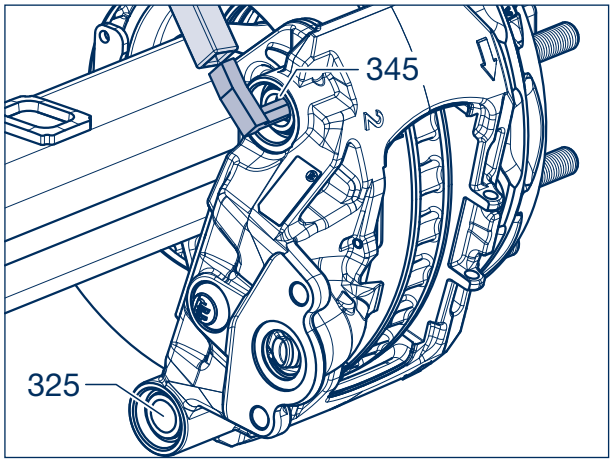

Figure 39

[4] Remove the brake caliper from the caliper anchor plate.

> **Caution!**
> **DANGER OF ACCIDENT!**
> **Do not open or dismantle a brake caliper.**
> **Only use replacement brake calipers.**

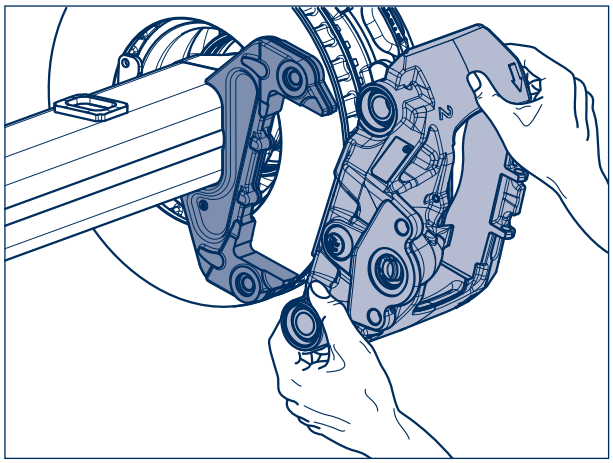

Figure 40

[5] The sealing plugs (arrows) must be removed from the bellows (354) if replacement brake calipers are to be used.

Note: The replacement brake calipers are pre-greased with BPW ECO Disc grease.

[6] Unscrew the sealing caps (335).

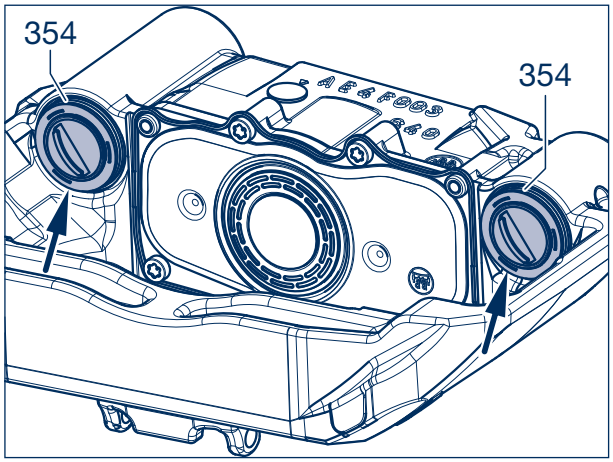

Figure 41

[7] Remove the guide pins (326, 346) from the removed brake calliper and insert them into the replacement brake calliper.

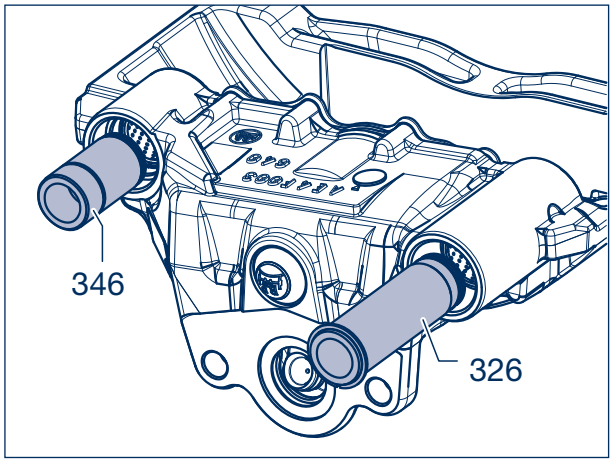

Figure 42

[8] Insert the bellows (354) into the groove on the guide pins (326, 346, arrow).

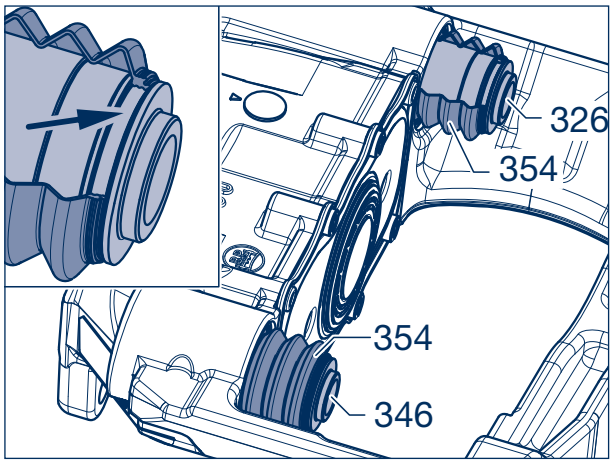

Figure 43

[9] Secure the bellow (354) in the groove of the guide pins (326, 346) by pushing on the ring (356).

Note:
Check the guide pins (326, 346) for ease of movement before installing the brake.

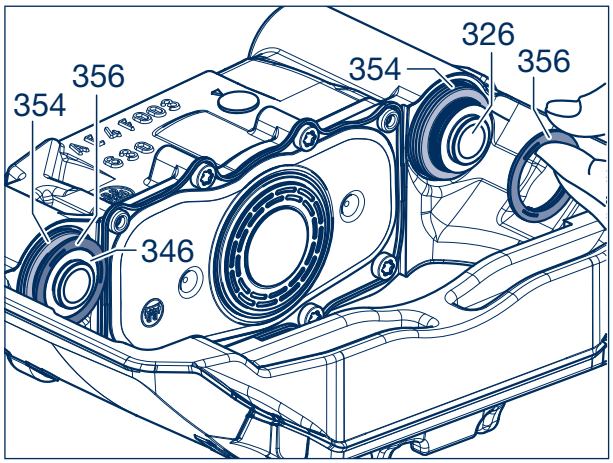

Figure 44

[10] Place the brake caliper on the brake anchor. Observe the left-hand and right-hand version. The arrow on the brake caliper shows the direction of the wheel rotation.

Repair note!
When placing the brake caliper, ensure that the bellows (354) have sufficient clearance in order to prevent damage.

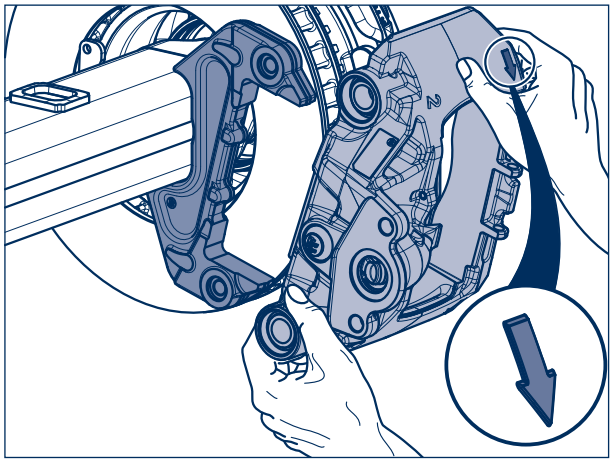

Figure 45

Repair note!
Ensure that the bellow (354) and the ring (356) are seated properly on the guide pin when mounting the brake caliper.

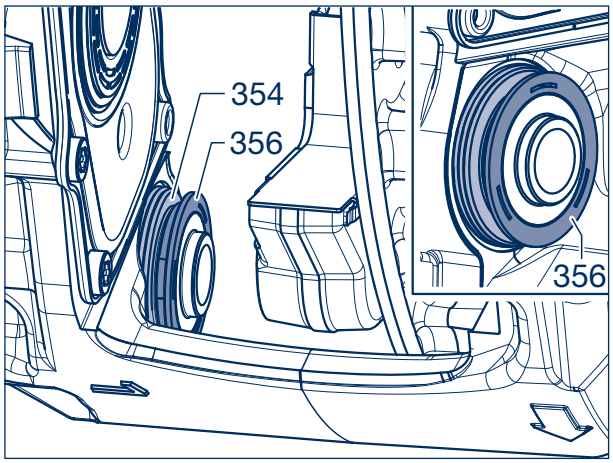

Figure 46

BPW Bergische Achsen Kommanditgesellschaft PO Box 12 80 · 51656 Wiehl, Germany · Phone +49 (0) 2262 78-0 info@bpw.de · **www.bpw.de**

Caution!
Cylinder head screws (325, 345) must not be re-used!

[11] Apply BPW ECO Disc Grease to the new cylinder head screws (325, 345) on the thread and the screw seating.

[12] Using an adapter AF 14, screw in according to version T12, T14, T17 or T18 (ECO Disc toolbox), and **do not tighten!**

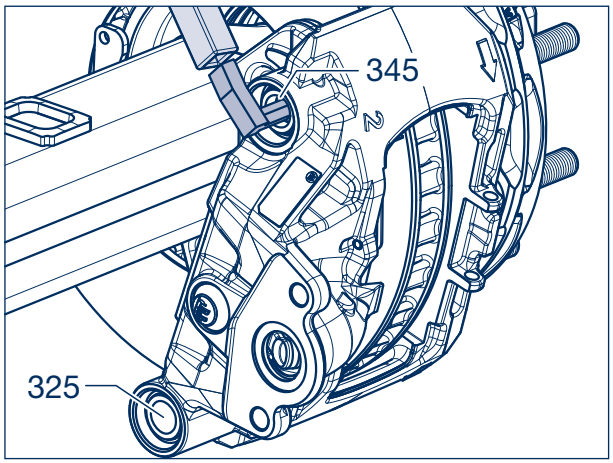

Figure 47

Repair note!
For the brake function, it is essential to tighten the fixed bearing bolt (marking 1 on the brake caliper) to the required tightening torque first.

[13] Tighten the cylinder head screw of the fixed bearing (325) with a tightening torque of:
M = **260 Nm** (250 - 270 Nm)
or otherwise with
150 Nm + 180° rotation angle.

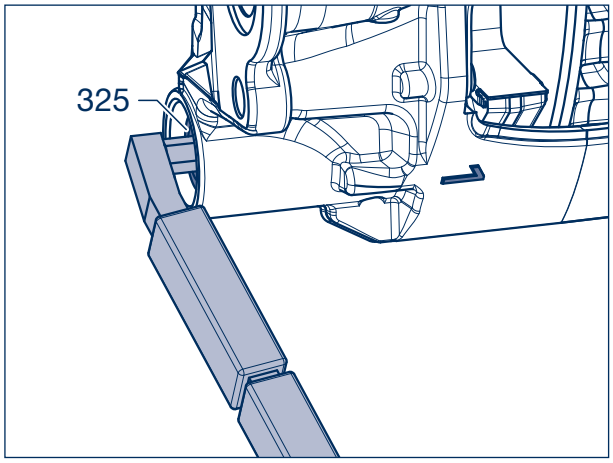

Figure 48

[14] Tighten the cylinder head screw (345) of the floating bearing (marking **2** on the brake caliper) with a tightening torque of:
M = **260 Nm** (250 - 270 Nm)
or otherwise with
150 Nm + 180° rotation angle.

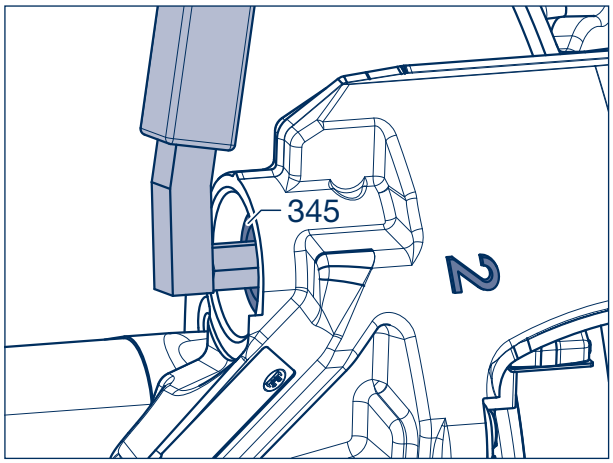

Figure 49

[15] Push the new O-ring (336) onto a new sealing cap (335) until contact (arrow).

[16] Screw in new pre-assembled sealing caps for the caliper guide (335, 336) using the adapter (BPW no.: 02.0130.47.10 or 02.0130.49.10, AF 14).
For this purpose, center the brake caliper in relation to the brake disc.
Tightening torque:
15 Nm (15 - 20 Nm)

[17] Check that the brake caliper can be moved easily.

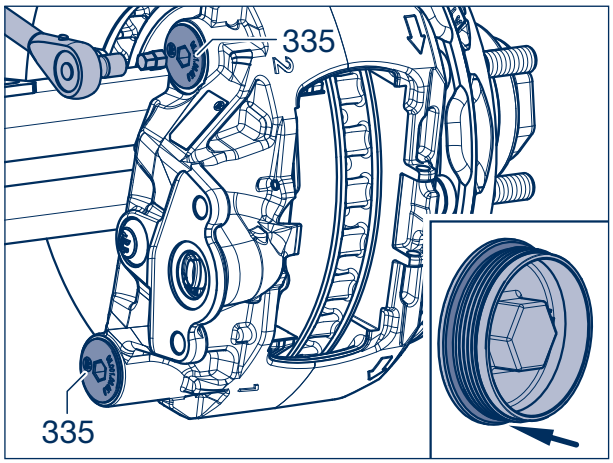

Figure 50

Note!
When new brake calipers are used, the plug must be removed! Using a thin screwdriver, pierce the plug in the middle and lever the cap out of the brake caliper.

☞ Continue with installation of brake pads, page 7, work step [25].

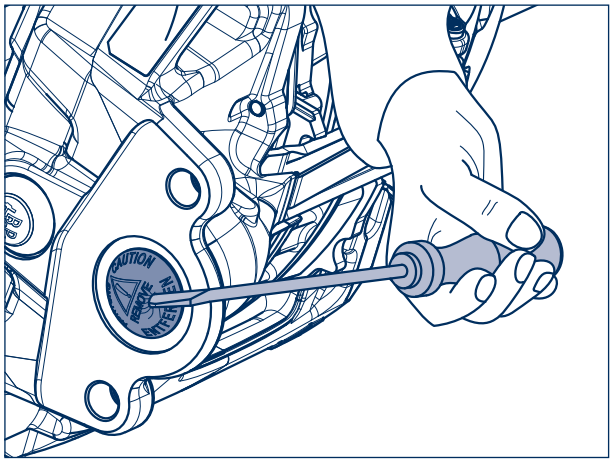

Figure 51

BPW Bergische Achsen Kommanditgesellschaft PO Box 12 80 · 51656 Wiehl, Germany · Phone +49 (0) 2262 78-0 info@bpw.de · **www.bpw.de**